60" x 32" x 22"

# FIJI (J-12)

## Classic SERIES

THE COMFORTABLE FIJI HAS BOTH HEAD AND ARM RESTS WHILE FEATURING A VERY LARGE BATHING SPACE, WHICH BECOMES THE PERFECT ESCAPE IN A STANDARD SIZE BATH.

### FEATURES:

- 5 flow-adjustable and directional jets including:
  - 1 back jet
  - 2 hip jets
  - 2 foot jets
- 1.5 B.H.P. pump - 7.2 Amps
- High gloss / high impact acrylic in standard colors
- Totally insulated with polyurethane foam
- Silent passive warm air induction system
- Drain back technology for sanitary bathing
- 5-year limited factory warranty
- Anti-microbial flex piping
- Lumbar support for comfort
- Extra thick glassing
- Pre-leveled base
- Slip resistant bottom
- Energy efficient
- Noise absorbtion

### STAY HOT GUARANTEE

Jetta guarantees that after 30 minutes of use, the water temperature will not drop more than two degrees. Our fully insulated whirlpool baths with low density foam insulation and passive warm air induction systems help keep you warmer, longer.

### OPERATING GALLONS (APPROX.):

- Regular Usage - 45 gal.

### OPTIONS AVAILABLE:

- Mood or LED lights
- Whirly triple spinning jets
- Tri-ssage control for distinct pump flow rates
- Bath waste & overflows
- Decorator and designer colors
- Contoured neck support pillow
- Jetted neck pillow
- Aromatherapy
- 6" acrylic grab bars
- Extra jets

### COLORS AVAILABLE:

- White • Biscuit • Almond (Standard)
- Sandbar • Mexican Sand
- Black • Ice Gray

### TRIM KIT FINISHES AVAILABLE:

- Polished Brass
- Polished Chrome
- Oil Rubbed Bronze
- Satin Nickel

UL LISTED

JETTA

**To Order or for More Information, E-mail whirlpool@earthlink.net or call 800-894-1022**

© 2007-05 by JETTA CORPORATION. All rights reserved.

# FIJI (J-12)
## 60" x 32" x 22"

## JETTA CORPORATION
## TECHNICAL SPECIFICATIONS

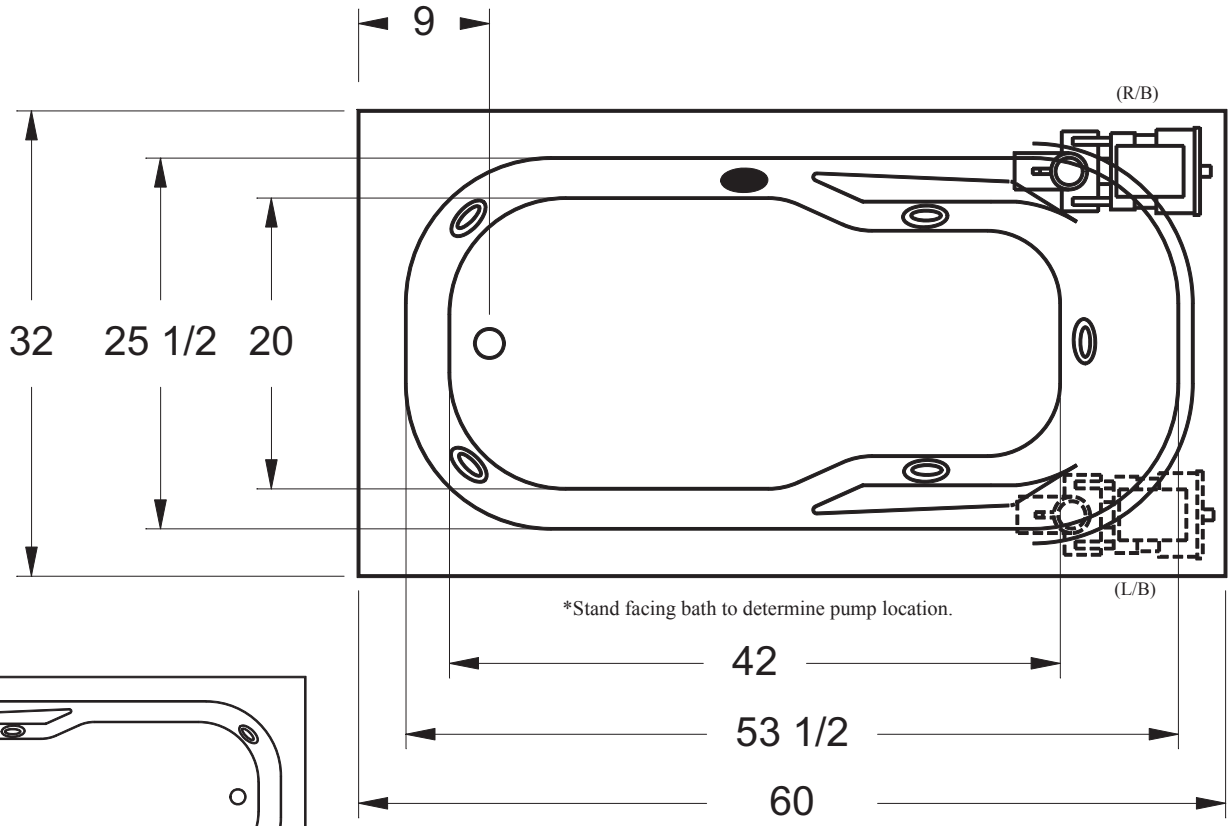


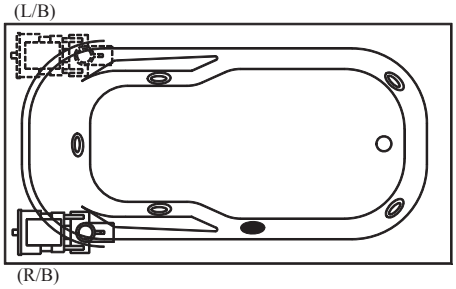


*Stand facing bath to determine pump location.

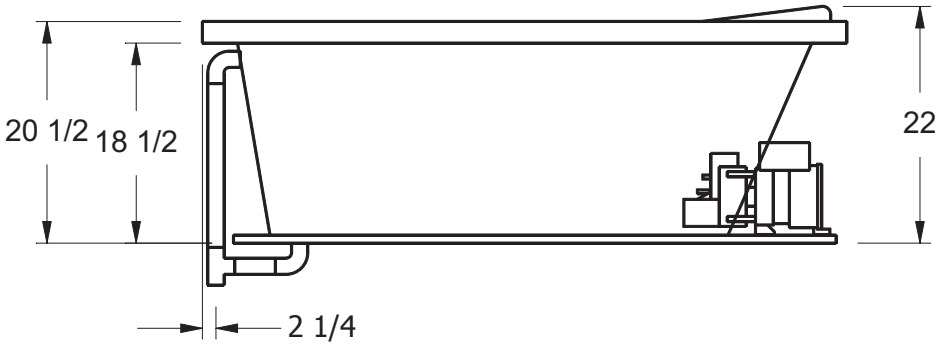


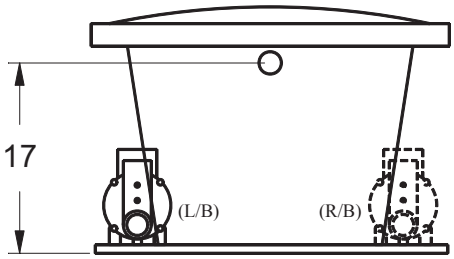


### ELECTRICAL SPECIFICATIONS:

| | |
|---|---|
| Required Electrical Service | 110/115 Volts |
| Standard Whirlpool Bath | 20 amp GFI |

Entire unit must be protected by a dedicated GFI breaker (refer to local codes).

### CODES/STANDARDS APPLICABLE:

Specified model meets or exceeds the requirements for the following standards: UL Listed, ANSI, ASME, IAPMO.

### SUGGESTED PUMP ACCESS PANEL:

20" x 12" - Actual recommended size may vary depending on distance of access to pump location.

### CUT OUT DIMENSION:

Subtract 2" from outside edge.

### SHIPPING WEIGHT: 220 lbs.

*L/B, R/B pump position determines suction location.

**INSTALLATION: Measure tub before building tub deck.** Add 1" to 3" of evenly distributed bedding compound under the base of the tub to provide maximum support. Tub should not be supported by rim in any way and should be level when installed. Jetta recommends using a quick setting concrete mix. Plastic sheeting should be laid between bedding and bath during installation. Drawing shows manufacturer's standard pump location. Optional locations available at an additional cost, depending on feasability. Contact Jetta for details. Dimensional variance on drawings may be +/- 1/2 inch and are subject to change without notice.

JETTA

© 2007-05 by JETTA CORPORATION. All rights reserved.